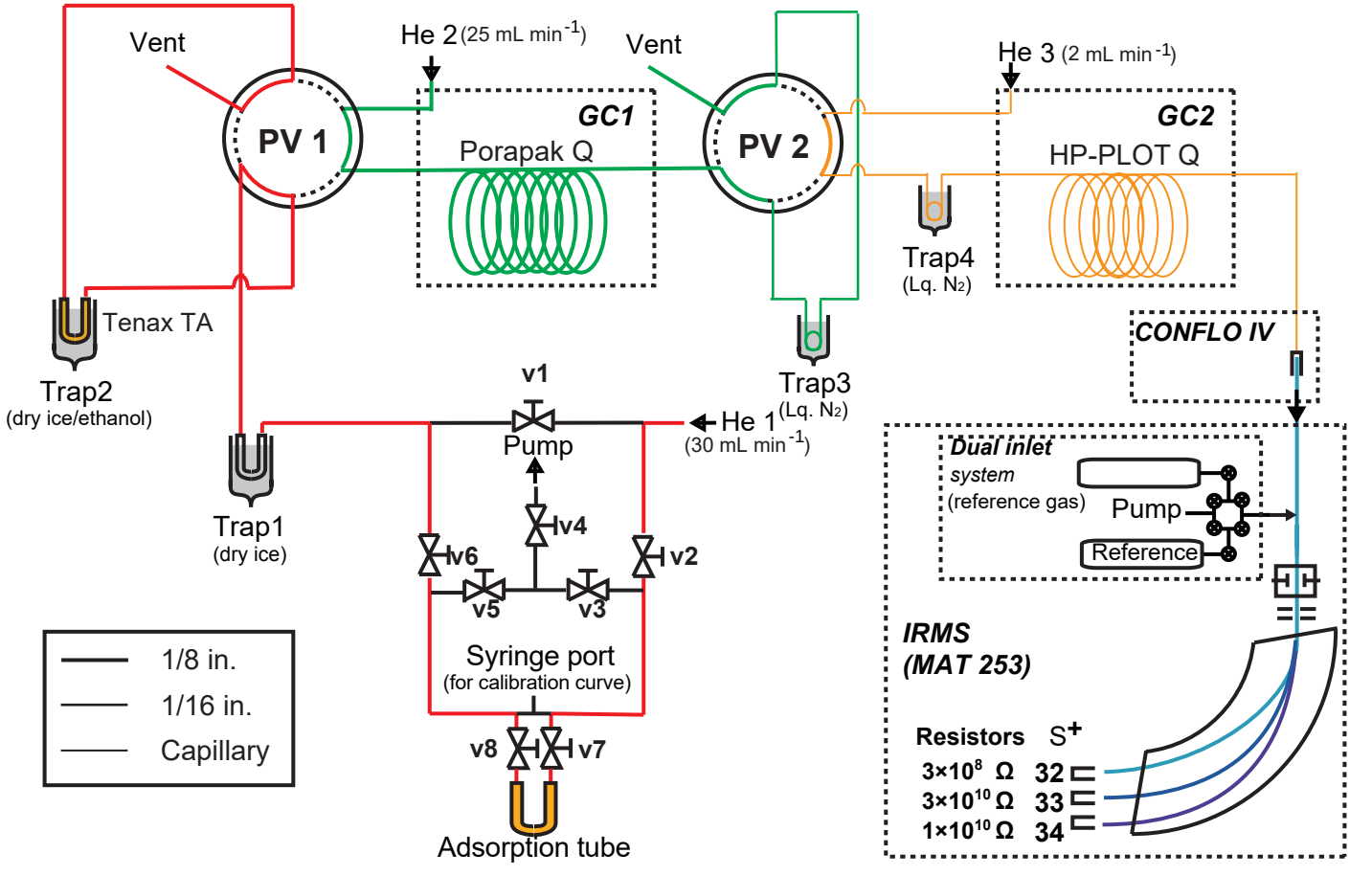
Vent
He 2 (25 mL min-1)
Vent
He 3 (2 mL min-1)
PV 1
GC1
Porapak Q
PV 2
GC2
HP-PLOT Q
Trap4
(Lq. N2)
Tenax TA
Trap2
(dry ice/ethanol)
Trap3
(Lq. N2)
CONFLO IV
v1
Pump
He 1
(30 mL min-1)
Trap1
(dry ice)
v4
v6
v2
v5
v3
Syringe port
(for calibration curve)
v8
v7
Adsorption tube
1/8 in.
1/16 in.
Capillary
Dual inlet
system
(reference gas)
Pump
Reference
IRMS
(MAT 253)
Resistors
S+
3×10^8 Ω 32
3×10^10 Ω 33
1×10^10 Ω 34