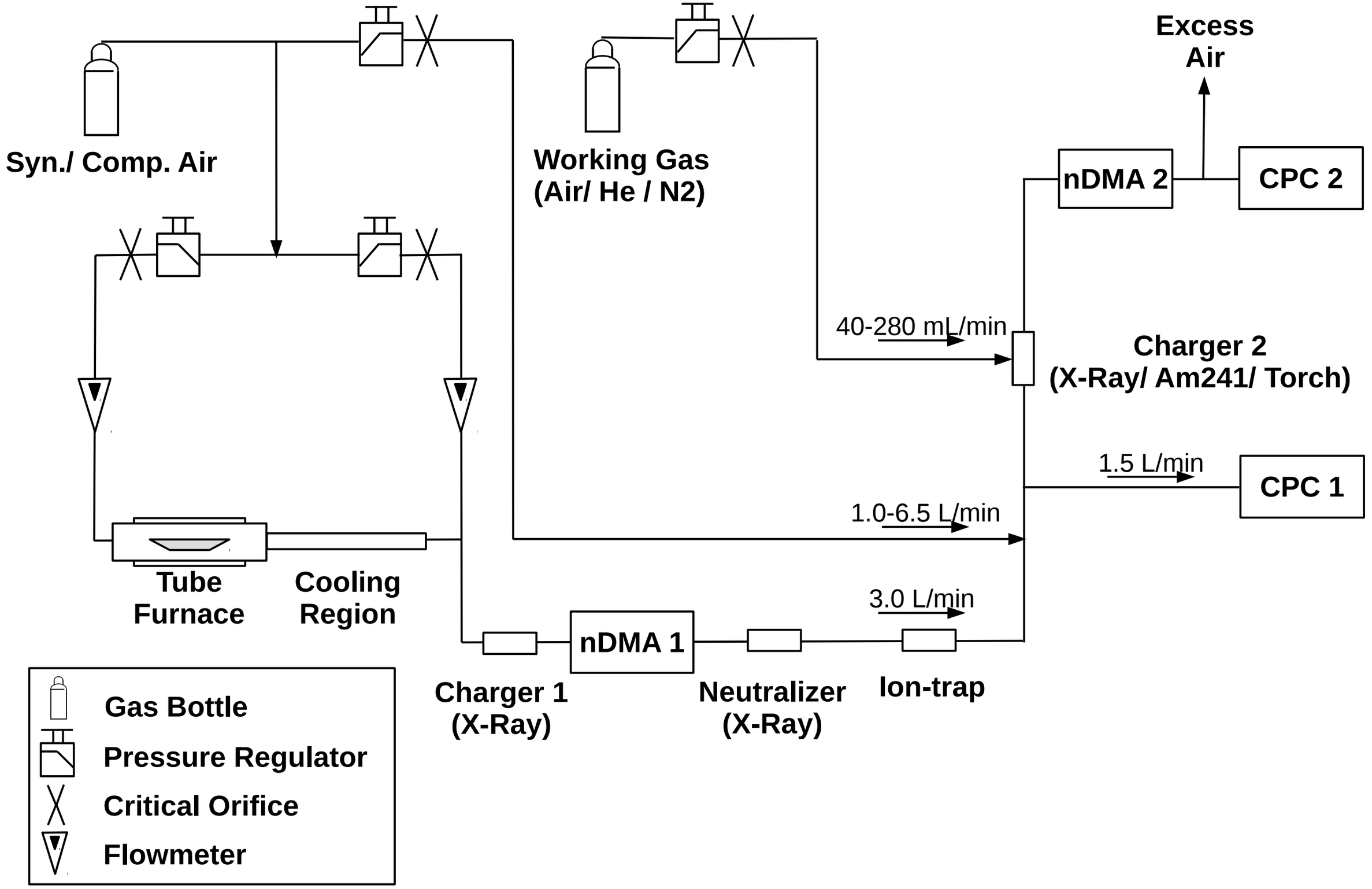
Syn./ Comp. Air
Working Gas
(Air/ He / N2)
Excess
Air
nDMA 2
CPC 2
40-280 mL/min
Charger 2
(X-Ray/ Am241/ Torch)
1.5 L/min
CPC 1
1.0-6.5 L/min
Tube
Furnace
Cooling
Region
3.0 L/min
nDMA 1
Charger 1
(X-Ray)
Neutralizer
(X-Ray)
Ion-trap
Gas Bottle
Pressure Regulator
Critical Orifice
Flowmeter