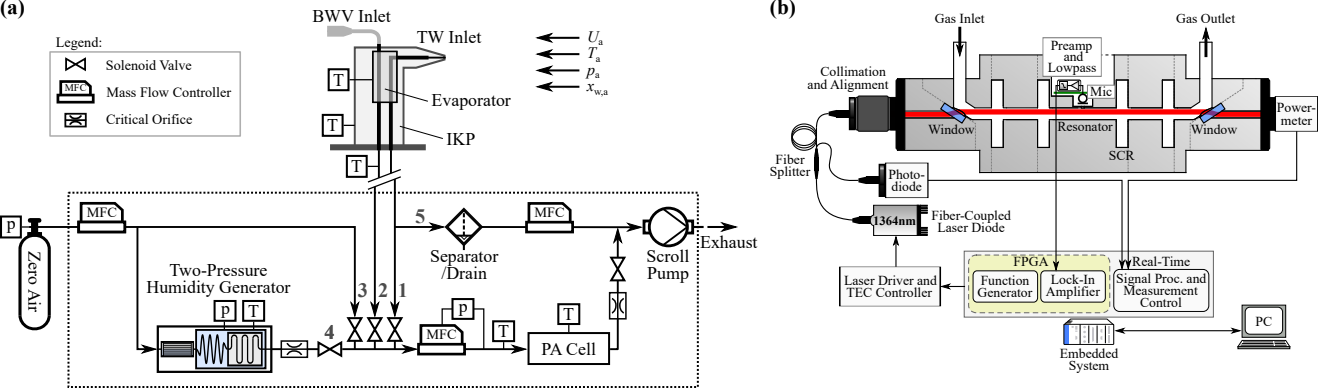
(a)
Legend:
Solenoid Valve
Mass Flow Controller
Critical Orifice
BWV Inlet
TW Inlet
Evaporator
IKP
T
U_a
T_a
p_a
$x_{w,a}$
P
MFC
Zero Air
Two-Pressure
Humidity Generator
P
T
3
2
1
4
5
MFC
Separator
/Drain
MFC
P
T
PA Cell
T
Scroll
Pump
Exhaust
(b)
Gas Inlet
Gas Outlet
Preamp
and
Lowpass
Collimation
and Alignment
Mic
Window
Resonator
Window
Power-
meter
SCR
Fiber
Splitter
Photo-
diode
1364nm
Fiber-Coupled
Laser Diode
Laser Driver and
TEC Controller
FPGA
Function
Generator
Lock-In
Amplifier
Real-Time
Signal Proc. and
Measurement
Control
PC
Embedded
System