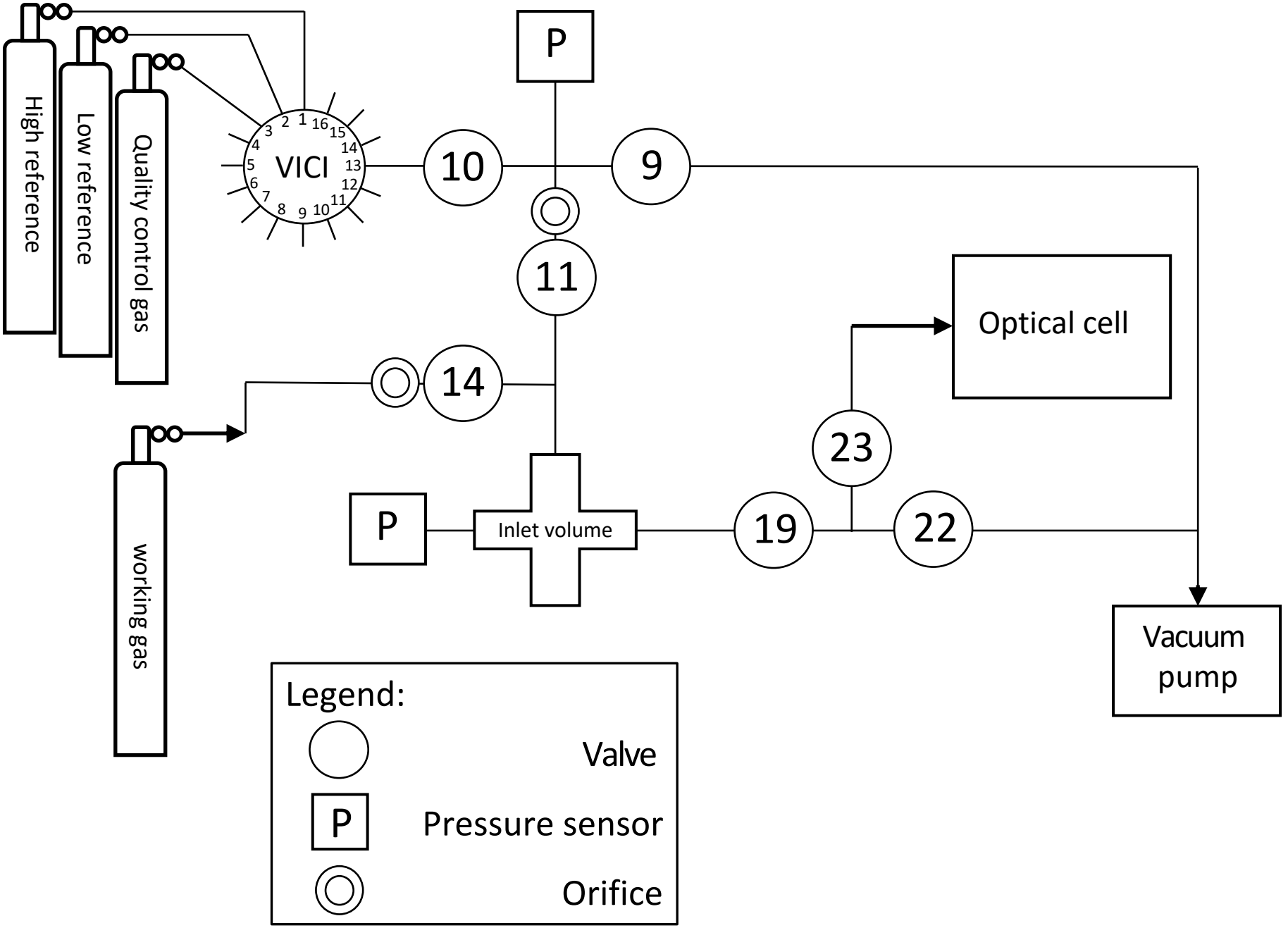
High reference
Low reference
Quality control gas
working gas
VICI
1
2
3
4
5
6
7
8
9
10
11
12
13
14
15
16
P
10
9
11
14
Optical cell
23
P
Inlet volume
19
22
Vacuum pump
Legend:
Valve
P
Pressure sensor
Orifice