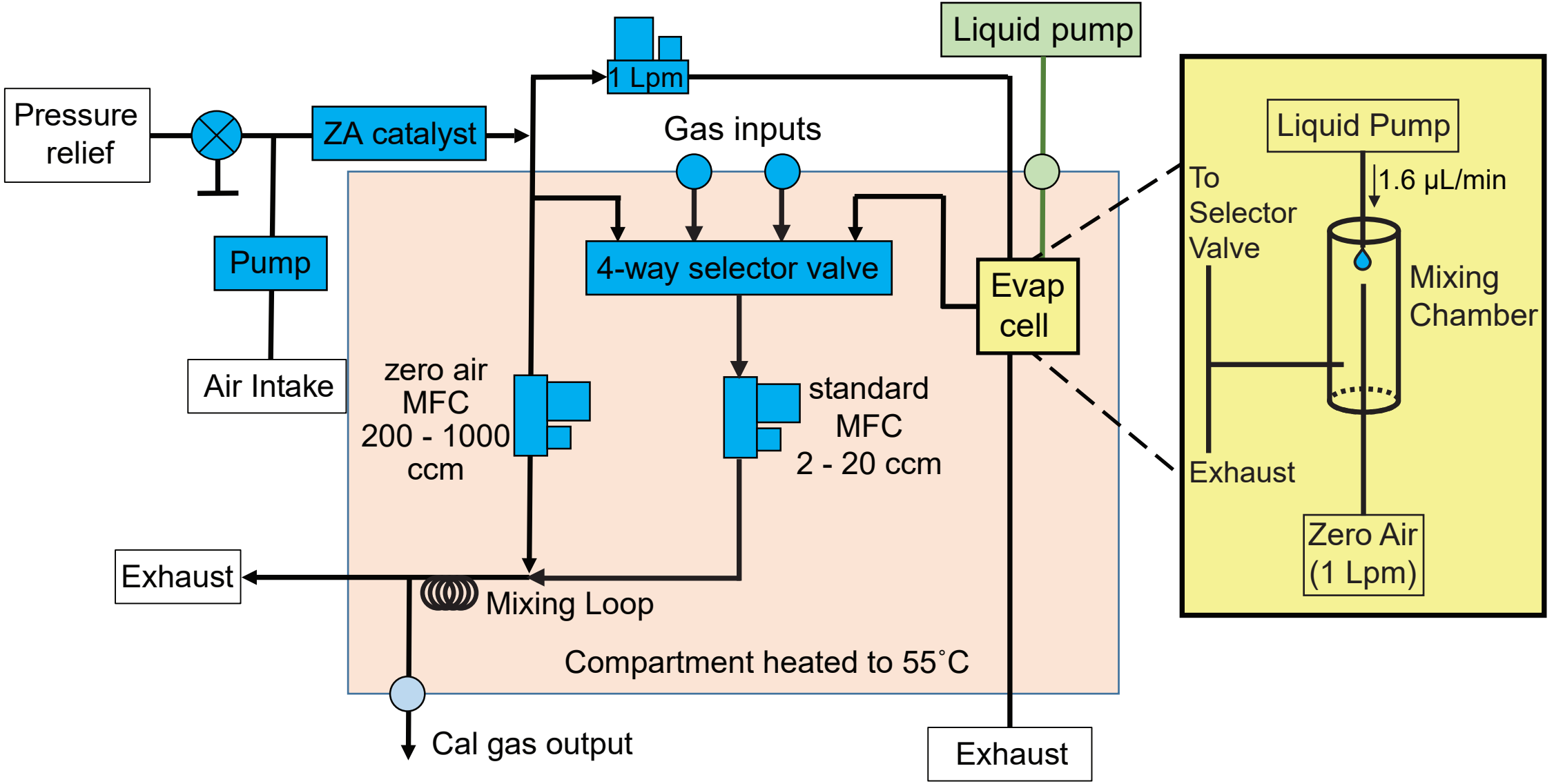
Pressure relief
ZA catalyst
1 Lpm
Liquid pump
Gas inputs
Pump
4-way selector valve
Evap cell
Air Intake
zero air MFC 200 - 1000 ccm
standard MFC 2 - 20 ccm
Exhaust
Mixing Loop
Compartment heated to 55˚C
Cal gas output
Exhaust
Liquid Pump
1.6 µL/min
To Selector Valve
Mixing Chamber
Exhaust
Zero Air (1 Lpm)