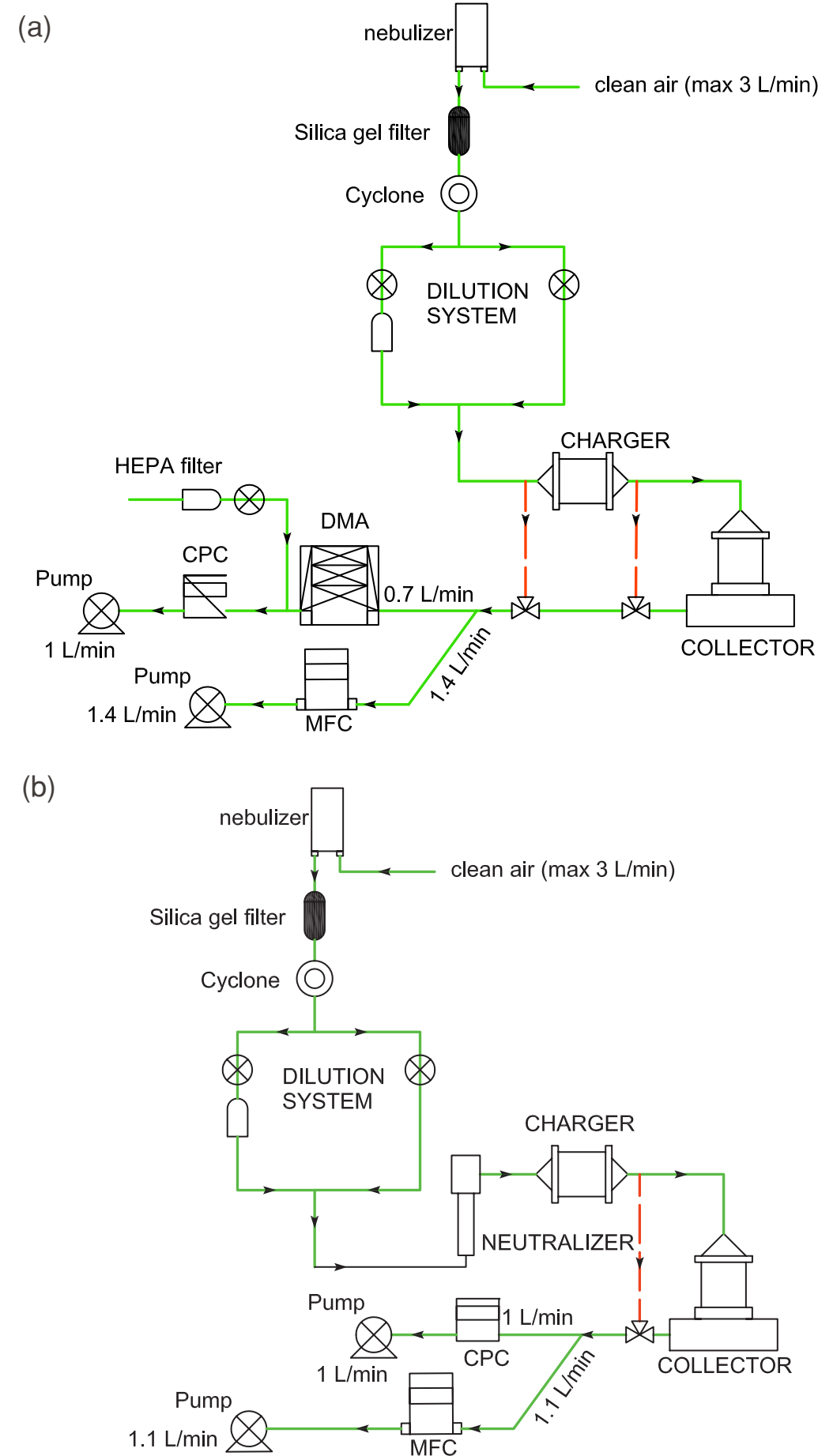
(a)
nebulizer
clean air (max 3 L/min)
Silica gel filter
Cyclone
DILUTION SYSTEM
CHARGER
HEPA filter
DMA
CPC
Pump
0.7 L/min
1 L/min
COLLECTOR
Pump
1.4 L/min
MFC
1.4 L/min
(b)
nebulizer
clean air (max 3 L/min)
Silica gel filter
Cyclone
DILUTION SYSTEM
CHARGER
NEUTRALIZER
Pump
1 L/min
CPC
1 L/min
COLLECTOR
1.1 L/min
Pump
1.1 L/min
MFC