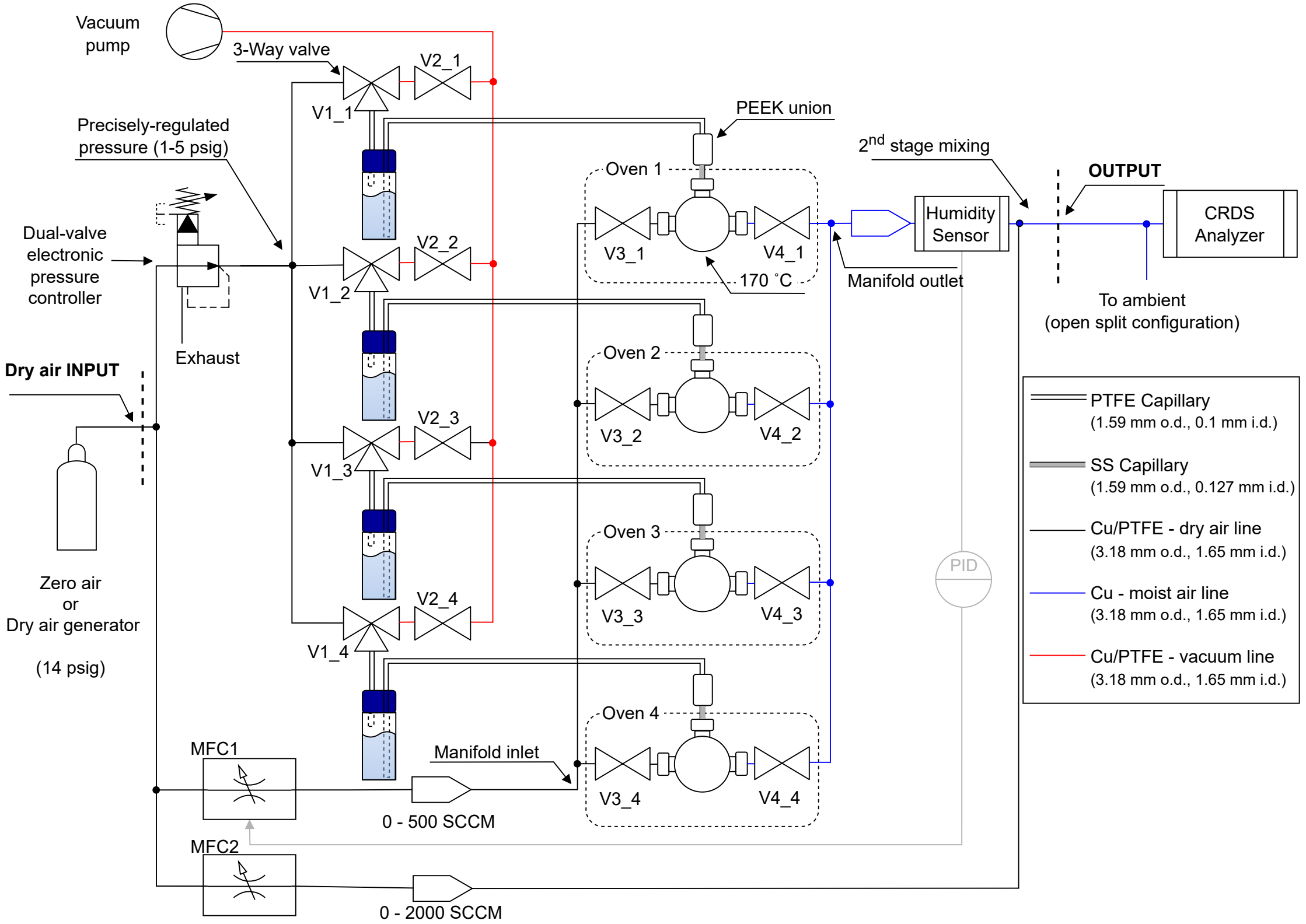
Vacuum pump
3-Way valve
V2_1
V1_1
PEEK union
Precisely-regulated pressure (1-5 psig)
2nd stage mixing
OUTPUT
Oven 1
Humidity Sensor
CRDS Analyzer
Dual-valve electronic pressure controller
V2_2
V3_1
V4_1
170 ˚C
Manifold outlet
V1_2
To ambient (open split configuration)
Exhaust
Oven 2
Dry air INPUT
V2_3
V3_2
V4_2
V1_3
Oven 3
PID
Zero air or Dry air generator
(14 psig)
V2_4
V3_3
V4_3
V1_4
Oven 4
MFC1
Manifold inlet
V3_4
V4_4
0 - 500 SCCM
MFC2
0 - 2000 SCCM
PTFE Capillary
(1.59 mm o.d., 0.1 mm i.d.)
SS Capillary
(1.59 mm o.d., 0.127 mm i.d.)
Cu/PTFE - dry air line
(3.18 mm o.d., 1.65 mm i.d.)
Cu - moist air line
(3.18 mm o.d., 1.65 mm i.d.)
Cu/PTFE - vacuum line
(3.18 mm o.d., 1.65 mm i.d.)