(a)
LGD Compa
axetris

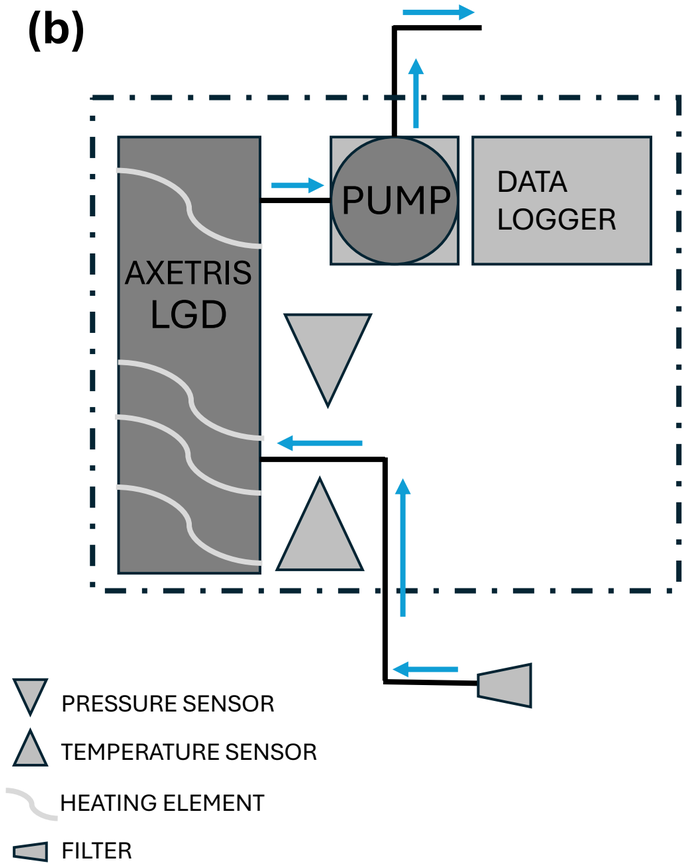
(b)
AXETRIS
LGD
PUMP
DATA
LOGGER
PRESSURE SENSOR
TEMPERATURE SENSOR
HEATING ELEMENT
FILTER

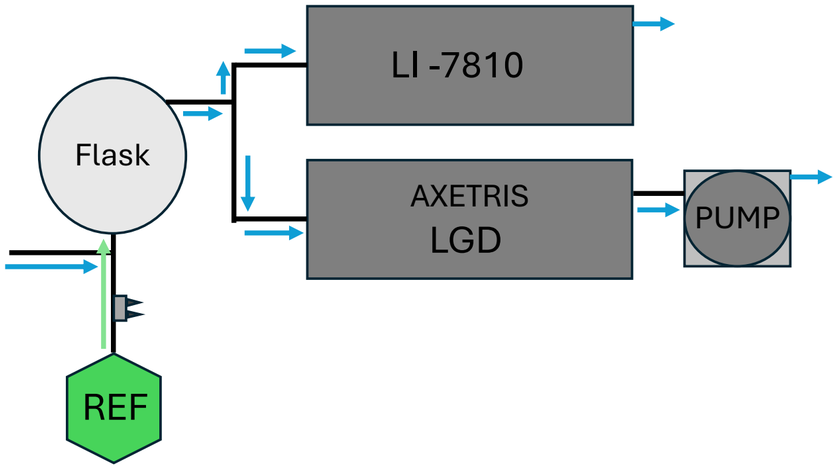
(c)
LI -7810
Flask
AXETRIS
LGD
PUMP
REF