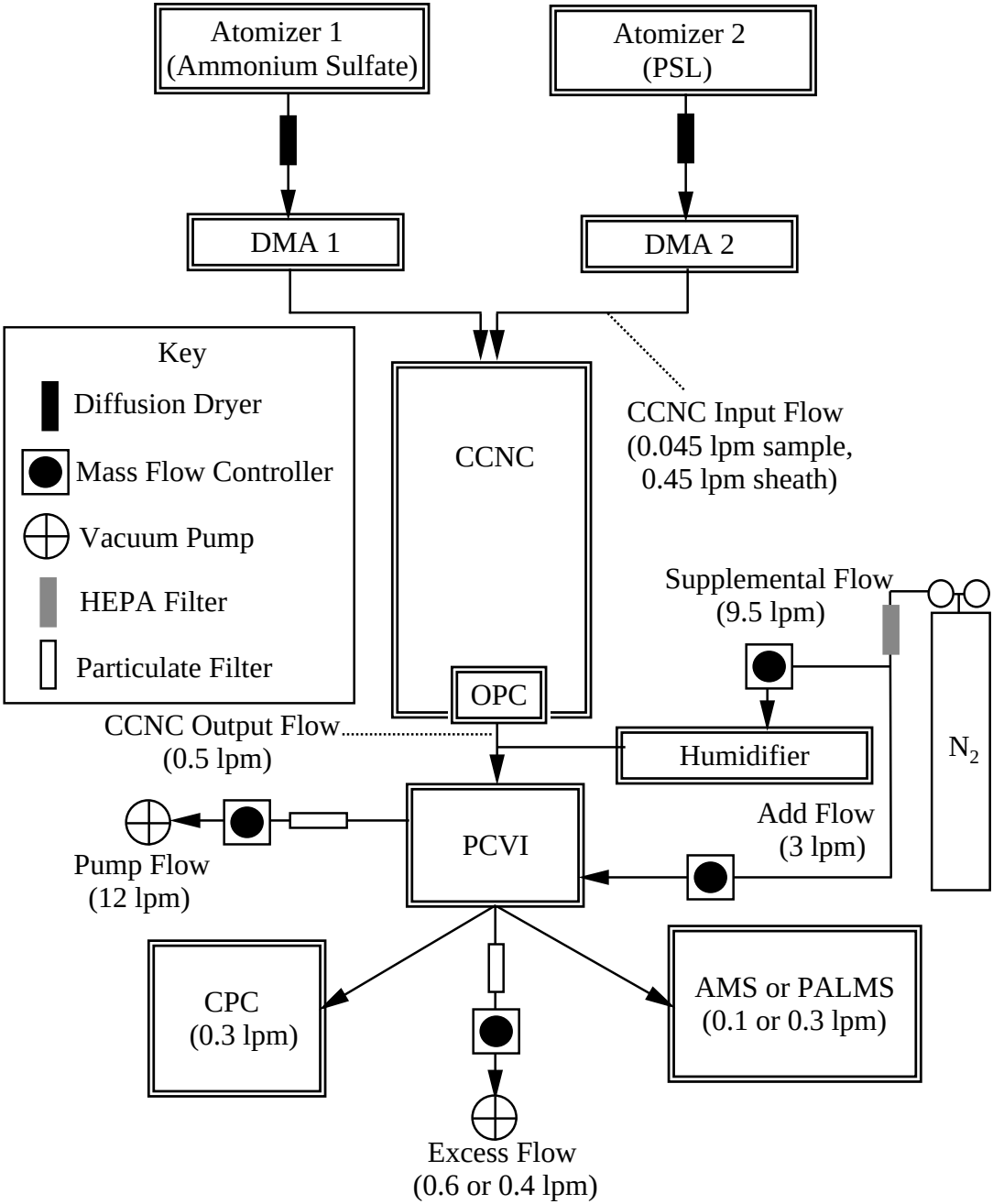
Atomizer 1
(Ammonium Sulfate)
Atomizer 2
(PSL)
DMA 1
DMA 2
Key
Diffusion Dryer
Mass Flow Controller
Vacuum Pump
HEPA Filter
Particulate Filter
CCNC
CCNC Input Flow
(0.045 lpm sample,
0.45 lpm sheath)
Supplemental Flow
(9.5 lpm)
OPC
CCNC Output Flow
(0.5 lpm)
Humidifier
N_2
Add Flow
(3 lpm)
PCVI
Pump Flow
(12 lpm)
CPC
(0.3 lpm)
AMS or PALMS
(0.1 or 0.3 lpm)
Excess Flow
(0.6 or 0.4 lpm)