Supplemental materials

In addition to this supplement document, we provide the templates and dimensional drawings that were used in the construction process, in the attached .zip file. What follows is a description of the included files, in addition to building advice, based on "in hindsight" experience.

S1 ISE-CUBE templates and 3D models

To make the holes for the electrical and pneumatic connectors, we used an off-site laser cutting service to fashion wooden templates from the "ISE_CUBES-connectors_template.svg" file. If laser-cutting service is unavailable, a large printer (accommodating at least A2 paper) can produce initial paper templates (using "ISE_CUBES-connectors_template.pdf") that can then be transferred over to a sturdier medium (e.g. thin plywood). We would not recommend directly using paper templates on the plastic cases. The sturdy templates then fit on the plastic case as shown in Figure S1. Once the template is mounted and secured with tape, the outline of each individual connector can be transferred onto the plastic. After etching, the template may or may not need to be removed, depending on the tools available to make the holes. We would recommend a power drill and hole saw set for the initial holes, and then hand tools to finish. This process should be taken slowly and iteratively, as it is crucial that the holes not be so large as to allow the connectors to turn during fastening. The exact model numbers of connectors used/recommended can be found in Sect. S1.1.

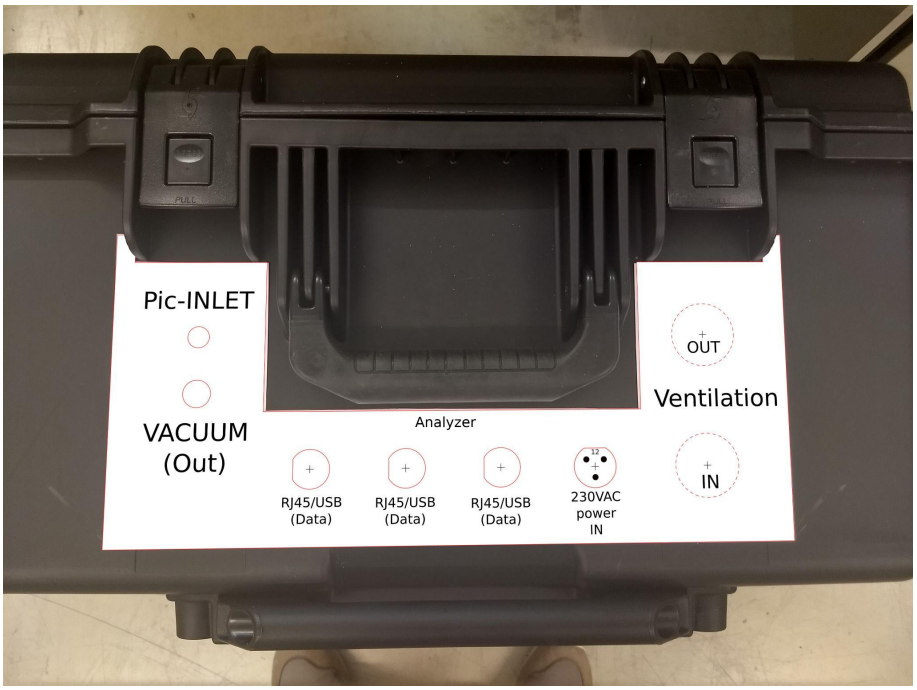

Figure S1. Example of the connector template on the Analyzer module. Please note that this is for illustration purposes, and the actual template should be made with something sturdier than paper.

The “ISE_CUBES-connectors_template” files have three large templates, one for each large ISE-CUBE module. Also included are smaller support plates that will help keep the pneumatic connectors in place. Though our prototype system had a separate small case for the Profiling module, we would recommend combining it with the Cold Trap module. In this way, the same Arduino Mega microcontroller can manage data streams for both the Cold Trap and Profiling modules.

Ventilation holes on the templates are given as guides and should be tailored to the exact ventilation system that one would utilize. We would recommend integrating a more powerful, dedicated Ventilation module into the system that would allow for deployments in warmer environments. After our field deployment, we had promising test results with a simple plastic storage container and a 209 m^3/hour blower fan (RG160-28/14NU, ebm-papst). However, we provide the “ISE_CUBEs-blower_fan_mount.stl” file that can be used to 3D print the original ventilation mount for the ebm-papst RL90-18/56 blower fan used in 2020. The fan attaches to the mount with two M4x25mm socket screws. The mount is then placed inside the plastic container in the middle of the connector sidewall (Figure S2, left panel). The mount is kept in place when a 1 inch BSP-threaded cam and groove adapter (362-6813, RS PRO)(Figure S2, right panel) is threaded through the plastic container hole; once correctly placed, double sided tape on the backside of the mount can help ensure that the fan assembly does not move. The corresponding cam and groove coupler (362-6712, RS PRO) can be attached to guide ventilation flow with flexible ducting (9110030250000, Merlett Plastics).

Figure S2. (Left panel) Placement of the original ventilation fan and mount. (Right panel) Cam and groove adapter with connected cam and groove coupler and ducting below.

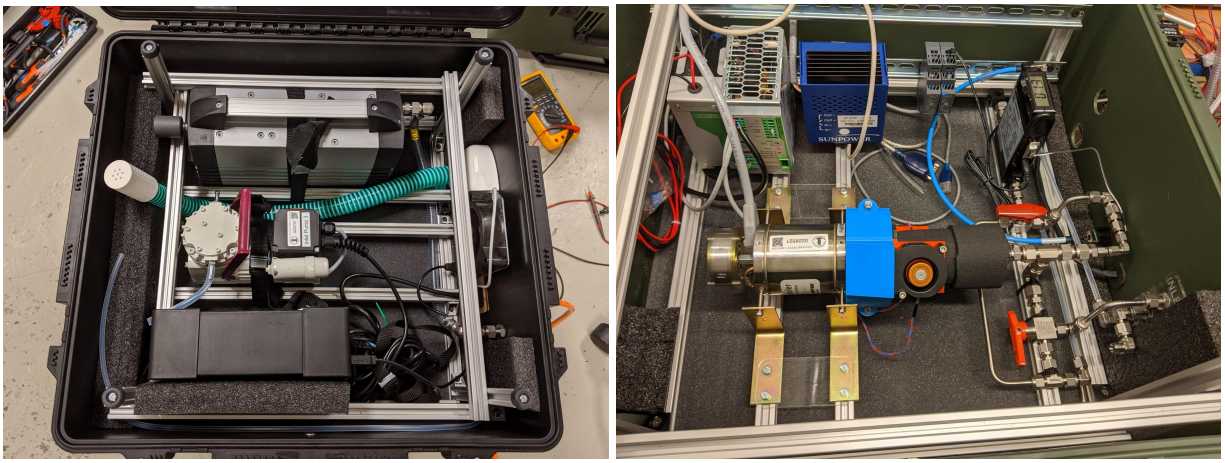

Figure S3. Left panel: Interior of Pump module with aluminium support frame. Right: An early iteration of the Cold Trap module interior with the aluminium frame.

The frames for Pump and Cold Trap modules used Rat-Rig aluminium profiles (Figure S3), with rubber pads at the end. The pad/profile lengths were cut to exactly fit the interior height of the plastic case, thereby "sandwiching" the frame between main case and lid. Ventilation mountings for the cryocooler are model and configuration specific and are not provided in this Supplement.

One might consider including a Raspberry Pi computer in the Cold Trap module, in addition to the Arduino Mega microcontroller. With a Raspberry Pi, one could more readily monitor and control the cryocooler over serial connection. And as we would recommend replacing the "(low range) mass flow meter and needle valve" combination with a mass flow controller, the Raspberry Pi would allow for the user to regulate the controller remotely. The Raspberry Pi could also expand capabilities for the integrated Profiling module, as will be discussed in Sect. S2. As the Arduino code depends on libraries and the exact instrumentation used in the module used, it is not included in this Supplement.

S1.1 Detailed ISE-CUBE connector list

Table S1. Electrical connectors used in the ISE-CUBE modules. As a more cost effective alternative, the RS PRO 21-mm series of electrical connectors could replace Amphenol LTD brand connectors, though templates would have to be modified.

Name on template	Connector used (Manufacturer: Model)	Corresponding cable connector (Manufacturer: Model)	Modules used in
230VAC power IN	Amphenol LTD: 62GB-57A12-03PN	Amphenol LTD: 62GB-16J12-03SN	Pump/Power; Analyzer; ColdTrap/Profiling
USB (Data)	RS PRO: 111-6759	Amphenol Socapex: USBAF6A200	Pump/Power; Analyzer; ColdTrap/Profiling

RJ45 (Data)	Amphenol Socapex: RJ45F7RJ	Amphenol Socapex: RJ45F6200OPEN	Pump/Power; Analyzer; ColdTrap/Profiling
12/24VDC power OUT	Amphenol LTD: 62GB-57A08-33SN	Amphenol LTD: 62GB-16J08-33PN	*Ventilation (recommended expansion module)*
230VAC power OUT	Amphenol LTD: 62GB-57A12-03SN	Amphenol LTD: 62GB-16J12-03PN	Pump/Power
5VDC OUT & Data	Amphenol LTD: 62GB-57A12-10SN	Amphenol LTD: 62GB-16J12-10PN	ColdTrap/Profiling

Table S2. Pneumatic connectors used in the ISE-CUBE modules. Rubber O-rings with inner diameters of 12 and 15 mm should be used on either side of the plastic case to ensure a good seal.

Names on template	Connector used (Manufacturer: Model)	Modules used in
VACUUM (In)	Swagelok Inc: SS-600-61	Pump/Power; Analyzer
EXHAUST (In)	Swagelok Inc: SS-400-61	Pump/Power; Analyzer; ColdTrap/Profiling

S2 Profiling arm drawings and 3D models

We used a 65 mm outer diameter (OD) aluminium pipe, with 2.5 mm thick walls as the basis for our articulating arm. For this diameter and weight of pipe, we required a custom-made mounting adapter ("Profiling-Steel_mount" files). As constructing this adaptor was non-trivial, we would recommend using a narrower pipe, with thinner walls. With a pipe smaller than 38 mm OD, one could use the CM210 Crossarm-to-Pole Bracket from Campbell Scientific, which is designed to attach to our chosen tripod (CM110, Campbell Scientific). Therefore, both the articulating arm and the upper cross-arm could use these commercially available brackets. Two small pulleys are attached to the end of the upper cross-arm

The head of the profiling arm was kept parallel with the ground with four guiding steel wires, attached above (two) and below (two) the main body of the arm ("Profiling-arm_drawings.pdf"). We made two pivot points in the ¼ inch stainless steel tubing with 5 cm lengths of ¼ inch PTFE tubing at the appropriate positions (Figure S4).

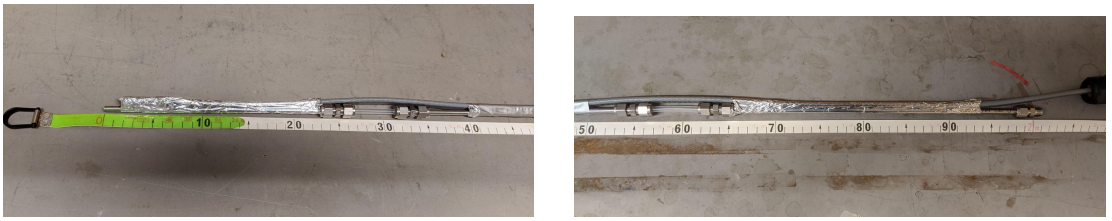

Figure S4. The head (left panel) and base (right panel) sections of the interior tubing of the profiling arm, including two 5 cm PTFE lengths.

We include the "Profiling-sensor_head" files, which contain slightly modified models of the sensor head housing we used, though still using all the same sensors as were used in 2020. The most substantial physical change is that the sensor head now mounts directly to the head of the arm, with multiple cable ties and/or long hose clamps (Figure S5). Additionally, the temperature sensor now has a naturally ventilated radiation shield. Two cable ties are also used to attach the main box and lid; similarly, two cable ties are also used to attach the temperature sensor to the mount and one to attach the shield to the mount. The temperature sensor cable is fed into the main box through an M12 cable gland at the rear of the main box. The main umbilical (leading to the Profiling module case/Arduino) is passed through an M20 cable gland. Rubber O-ring gaskets are used to seal ultrasonic mounts and the main box lid. As the Arduino code depends on libraries and the exact sensor models used, it is not included in this Supplement.

Though we include these models for completeness, in light of the deficiencies encountered with our chosen ultrasonic distance sensors (during windy and low-level snowpack operations), we would recommend replacing them. Potential replacements could be either higher quality ultrasonic sensors or Time of Flight LiDARs, such as the Teraranger Evo series from Terabee. An additional advantage of these particular LiDARs is that they come with USB 2.0 interfaces, allowing for direct connection and logging to the Analyzer module. However, if one includes a Raspberry Pi computer in the ColdTrap/Profiling module (as discussed in Sect. S1), it would be possible to route the USB connection to that module, rather than tasking the CRDS analyzer with more datalogging. In any case, replacing the distance sensors would involve redesigning the sensor box.

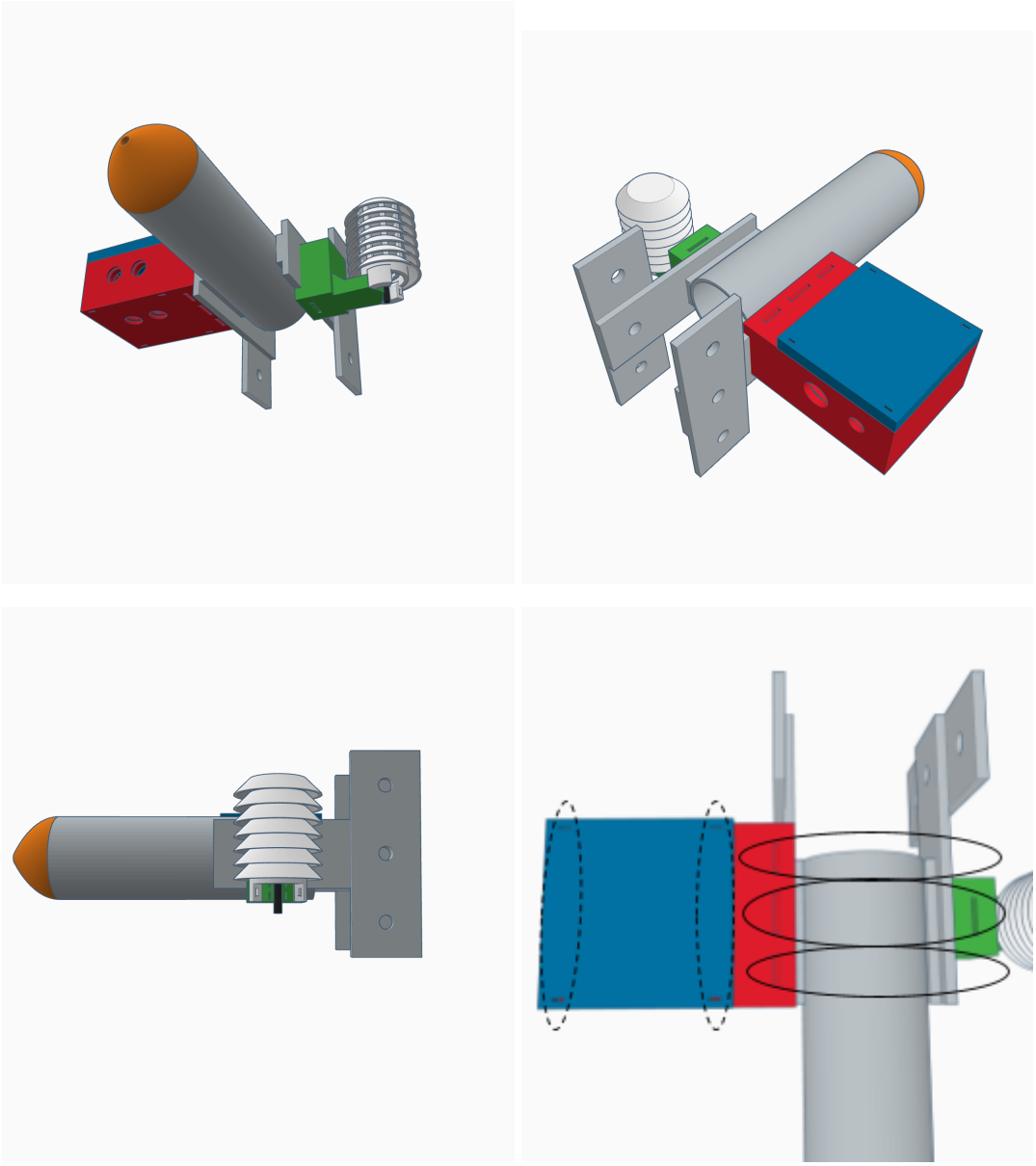

Figure S5. The redesigned sensor package. Main box (red) attaches to the arm head (gray) with cable ties and/or long hose clamps through three slots, also securing the temperature sensor mount (green) (lower right panel, solid ellipses). Lid (blue) attaches to the main box with two long cable ties (lower right panel, dashed ellipses). Temperature shield attaches to the mount with a cable tie (lower left panel). Head cap (orange) slides into tubing and is secured with adhesive tape.